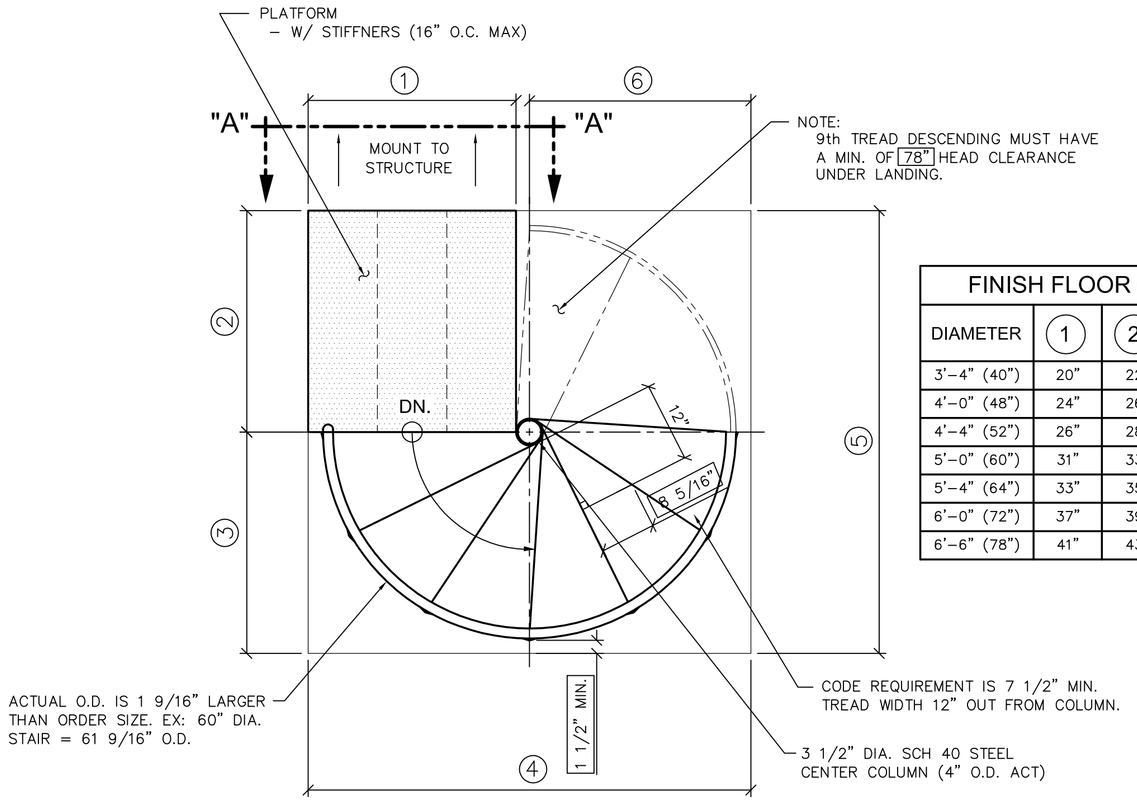

"LEFT HAND UP" (CLOCKWISE)

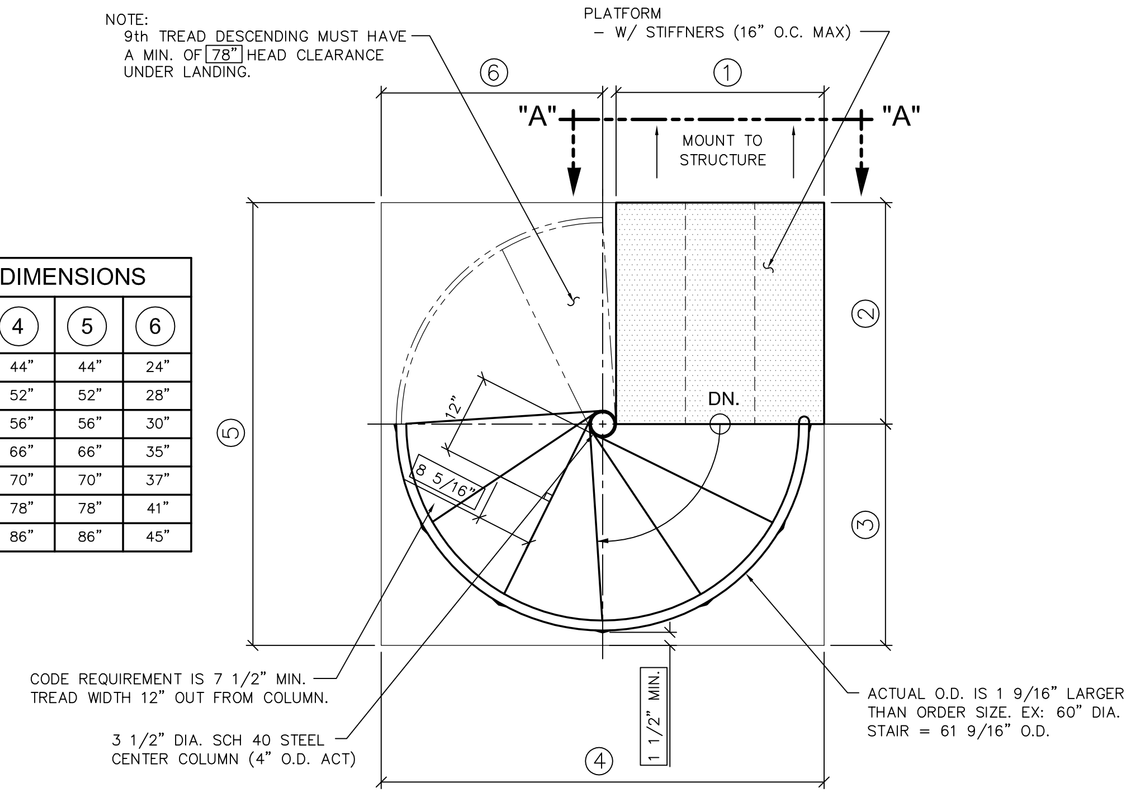

"RIGHT HAND UP" (COUNTER CLOCKWISE)

Plan View at Top Stair

3/4" = 1'-0"

FINISH FLOOR OPENING DIMENSIONS						
DIAMETER	1	2	3	4	5	6
3'–4" (40")	20"	22"	22"	44"	44"	24"
4'–0" (48")	24"	26"	26"	52"	52"	28"
4'–4" (52")	26"	28"	28"	56"	56"	30"
5'–0" (60")	31"	33"	33"	66"	66"	35"
5'–4" (64")	33"	35"	35"	70"	70"	37"
6'–0" (72")	37"	39"	39"	78"	78"	41"
6'–6" (78")	41"	43"	43"	86"	86"	45"

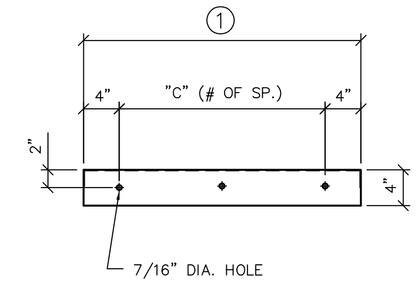

View "A - A"

1" = 1'-0"

TREAD SCHEDULE			
STAIR DIAMETER	DIMENSION		
	"K"	"L"	"M"
40"	18"	10 15/16"	8 11/16"
48"	22"	13 1/8"	9 1/16"
52"	24"	14 3/16"	9 3/16"
60"	28"	16 5/16"	9 7/16"
64"	30"	17 3/8"	9 1/2"
72"	34"	19 9/16"	9 11/16"
78"	37"	21 1/8"	9 3/4"

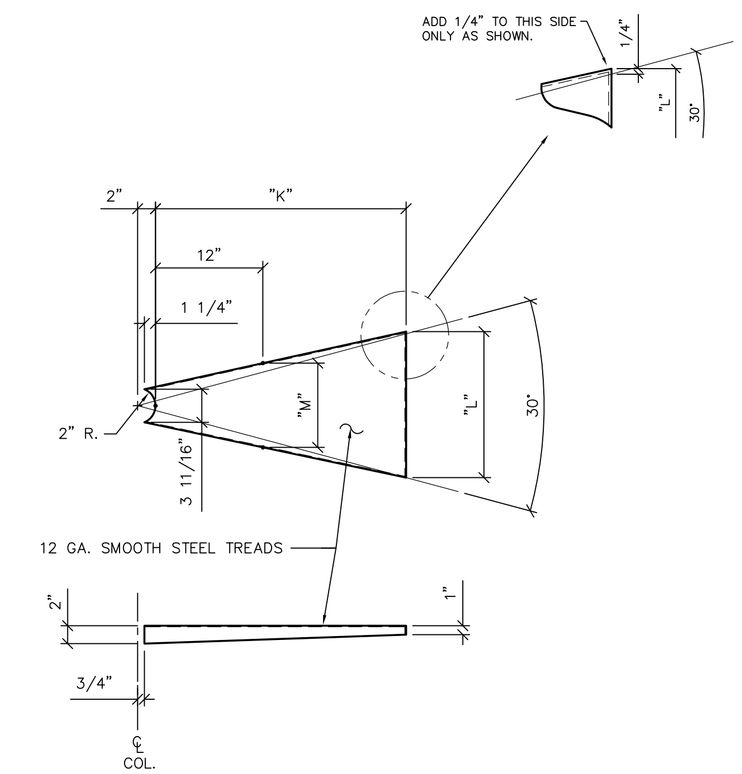

Tread Detail

1" = 1'-0"

30° TREAD RISER CHART 8.5" MIN. - 9.5" MAX. RISERS			
FLOOR TO FLOOR HEIGHT	NUMBER OF TREADS	NUMBER OF RISERS	DEGREE OF TURN
76.5" – 85.5"	8	9	240°
TO 95"	9	10	270°
TO 104.5"	10	11	300°
TO 114"	11	12	330°
TO 123.5"	12	13	360°
TO 133"	13	14	390°
TO 142.5"	14	15	420°
TO 152"	15	16	450°
TO 161.5"	16	17	480°
TO 171"	17	18	510°

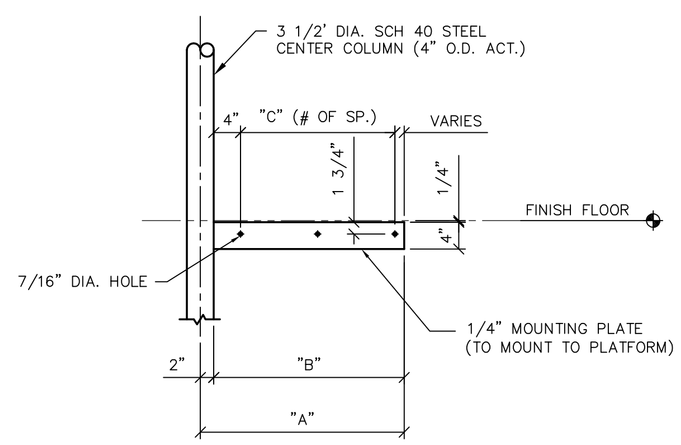

Mounting Plate Detail

3/4" = 1'-0"

MOUNTING PLATE SCHEDULE			
STAIR DIAMETER	"A"	"B"	"C"
40"	20"	17 3/4"	12" (1)
48"	24"	21 5/8"	16" (1)
52"	26"	23 5/8"	18" (1)
60"	30"	28 7/16"	11 1/2" (2)
64"	32"	30 3/8"	12 1/2" (2)
72"	36"	34 3/16"	14 1/2" (2)
78"	39"	37 5/8"	16 1/2" (2)

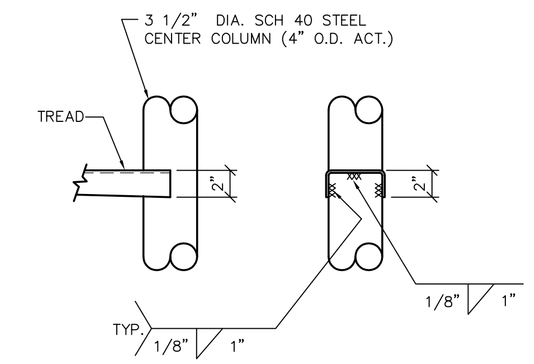

Tread Weld Detail

1 1/2" = 1'-0"

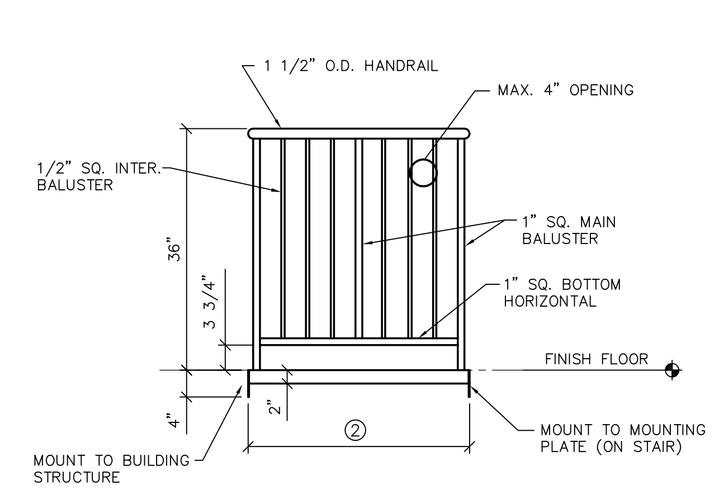

Platform Railing (Optional)

3/4" = 1'-0"

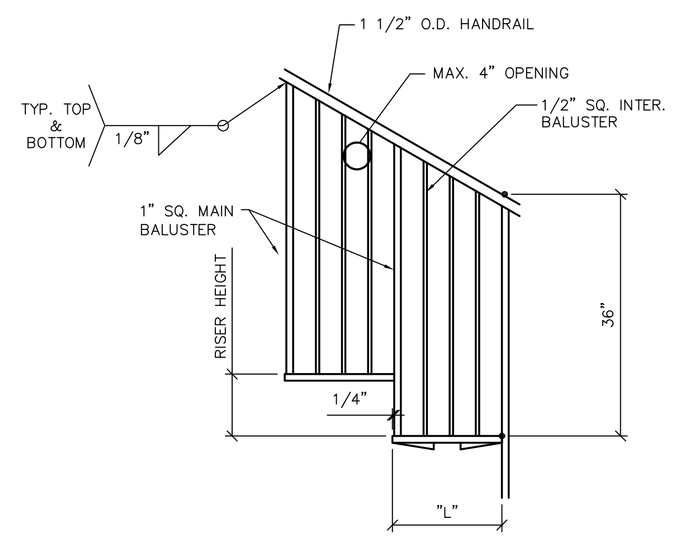

Baluster Detail

3/4" = 1'-0"

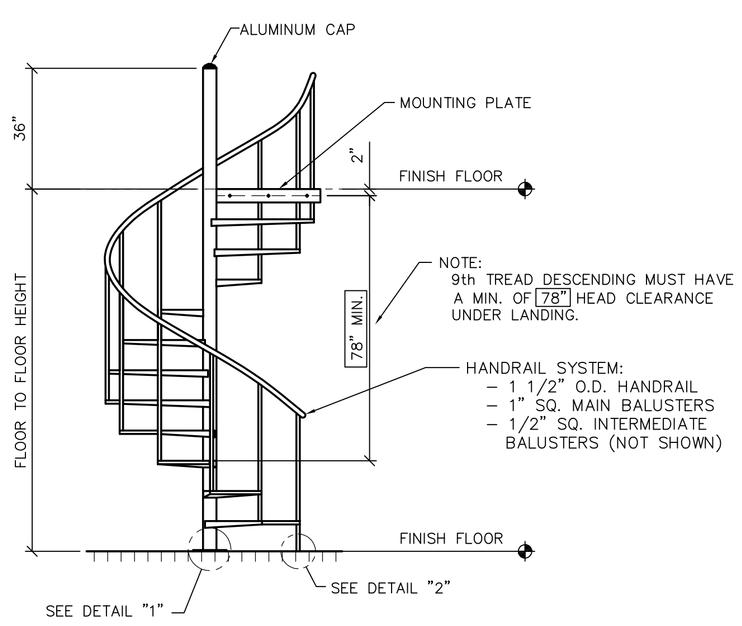

"LEFT HAND UP" SHOWN

Side Elevation

3/8" = 1'-0"

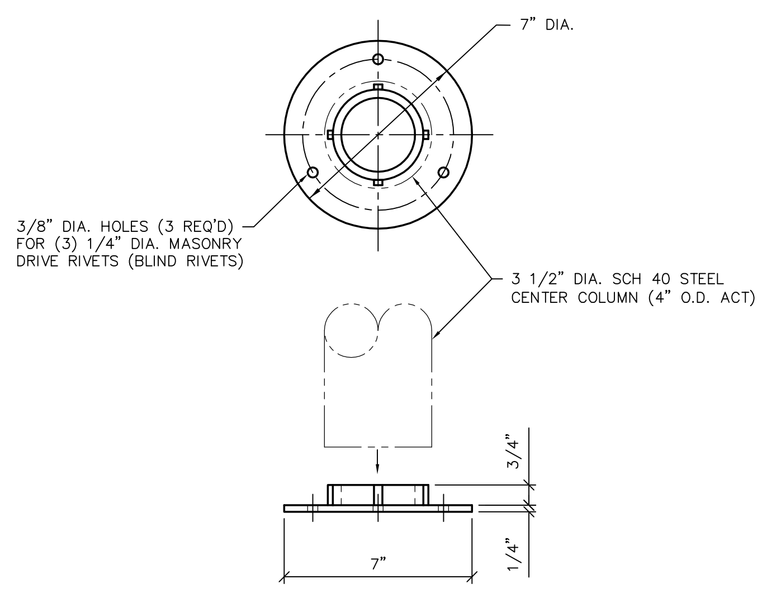

Detail "1"

3" = 1'-0"

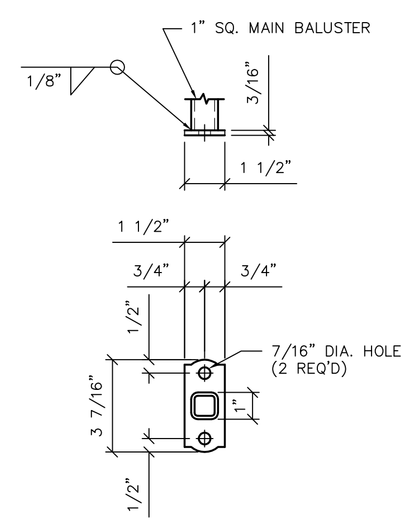

Detail "2"

3" = 1'-0"

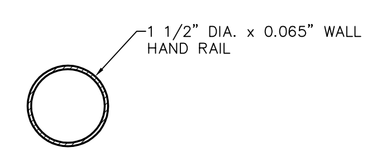

Handrail Profile

6" = 1'-0"

NOTES:

1. DUE TO THE NUMEROUS USES OF SPIRAL STAIRS IT IS THE RESPONSIBILITY OF SPIRAL STAIRS OF AMERICA TO BUILD TO BROCHURE SPECIFICATIONS. ADHERENCE TO LOCAL CODES REMAINS THE RESPONSIBILITY OF THE PURCHASER. ALTHOUGH SUGGESTIONS MAY BE MADE, IT IS THE PURCHASER'S RESPONSIBILITY TO MAKE CERTAIN THE STAIR MEETS THEIR APPLICATION.
2. DUE TO PRODUCTION RUNS, DIMENSIONS MAY VARY SLIGHTLY.
3. STAIR SYSTEM TO HAVE (1) COAT BLACK SHOP PRIMER.
4. ALL WELD JOINTS MUST BE FINISHED ACCORDING TO NOMMA CLASS 4 UNLESS OTHERWISE NOTED.
5. THIS STAIR SYSTEM IS DESIGNED AND BUILT TO S.S.A.'S INTERPRETATION OF IBC CODE IT IS THE CUSTOMER'S RESPONSIBILITY TO HAVE LOCAL CODE INSPECTORS APPROVAL OF THIS STAIR SYSTEM PRIOR TO FABRICATION.
6. DIMENSIONS WITH A BOX AROUND THEM DENOTES DIMENSIONS THAT IF CHANGED CAN & WILL CAUSE CODE VIOLATIONS OR CLEARANCE ISSUES.
7. A 52" DIAMETER SPIRAL STAIR WILL ROTATE THROUGH A 30° DOORWAY
8. A 64" DIAMETER SPIRAL STAIR WILL ROTATE THROUGH A 36° DOORWAY

UNLESS SPECIFIED, ALL STOCK STAIRS ARE SHIPPED WITH 12 GAUGE SMOOTH TREADS INTENDED TO BE COVERED BY CARPETING, WOOD, NONSKID PAINT OR GRIP STRIPS, AND WITH 1" SQUARE MAIN, 1/2" SQUARE ADDITIONAL BALUSTERS, PRIME PAINTED BLACK. ALL PRICES F.O.B., ERIE, PA.

REV.	DESCRIPTION	DRAWN	CHECK	APPR.	DATE

TITLE: Standard All Welded Steel Spiral Staircase "Square Back Tread"

CUSTOMER:

DRAWN	DEG	7/25/08
CHECKED		
SCALE	NOTED	
DWG. NO.	S1-0475	

SPIRAL STAIRS OF AMERICA
ERIE, PENNSYLVANIA
(814) 898–3700 FAX: (814) 899–9139